Simple DC Motor Control Interface Prototype for Raspberry Pi

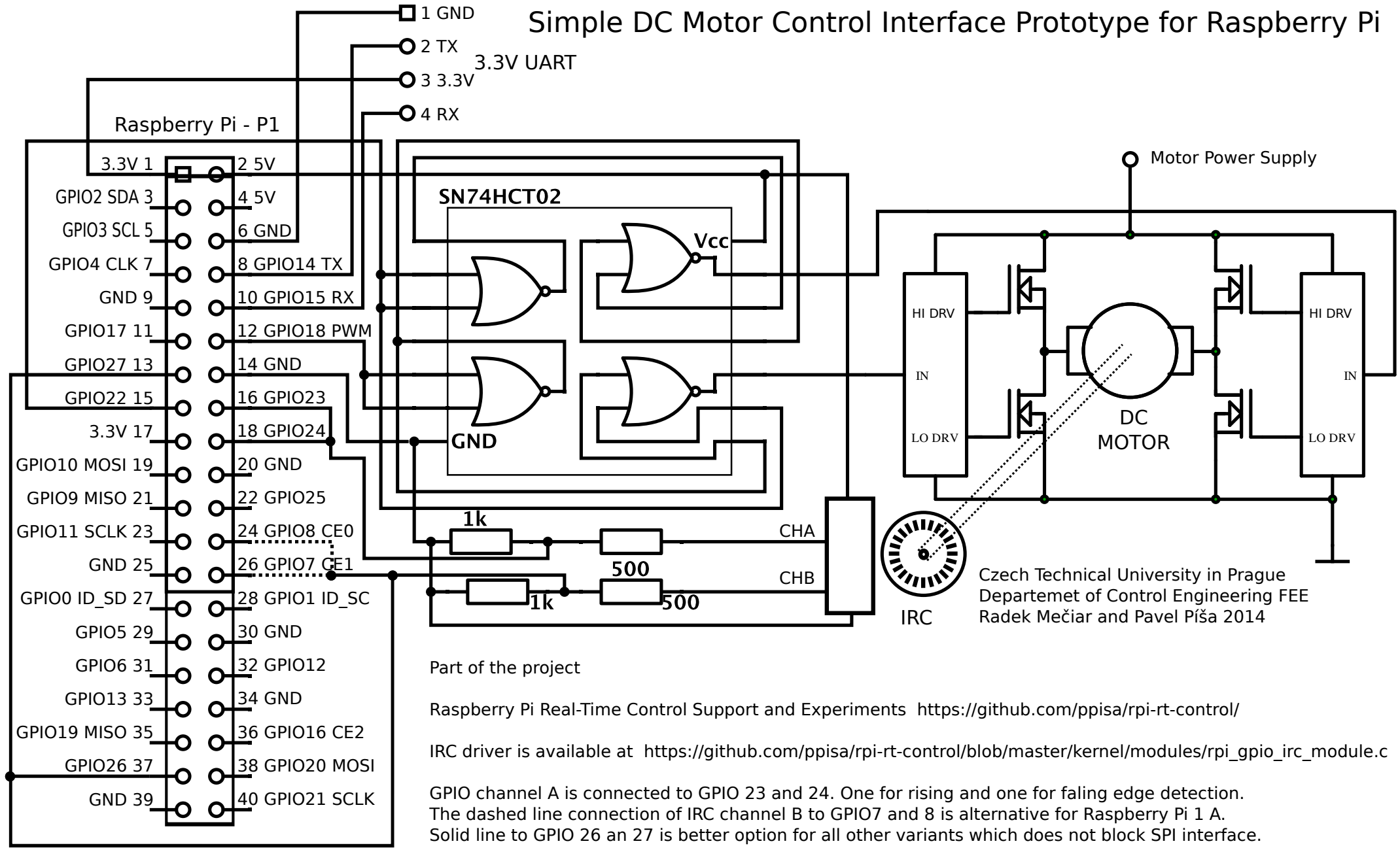

Czech Technical University in Prague
Departemet of Control Engineering FEE
Radek Mečiar and Pavel Píša 2014

Part of the project

Raspberry Pi Real-Time Control Support and Experiments https://github.com/ppisa/rpi-rt-control/

IRC driver is available at https://github.com/ppisa/rpi-rt-control/blob/master/kernel/modules/rpi_gpio_irc_module.c

GPIO channel A is connected to GPIO 23 and 24. One for rising and one for faling edge detection.
The dashed line connection of IRC channel B to GPIO7 and 8 is alternative for Raspberry Pi 1 A.
Solid line to GPIO 26 an 27 is better option for all other variants which does not block SPI interface.